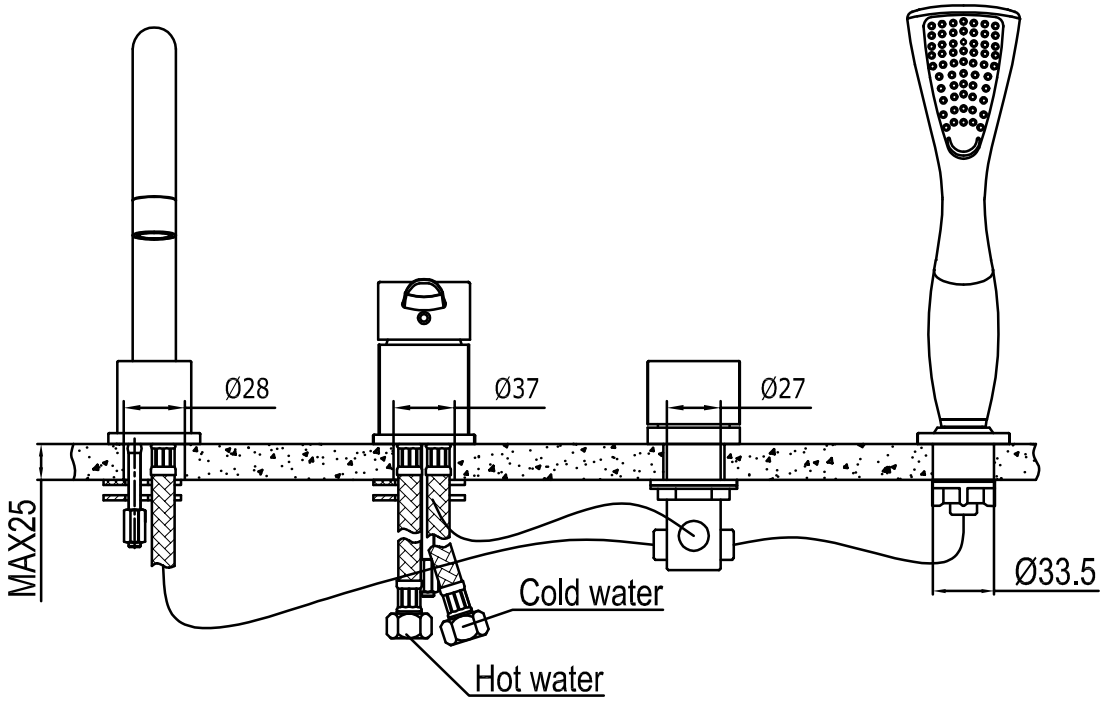

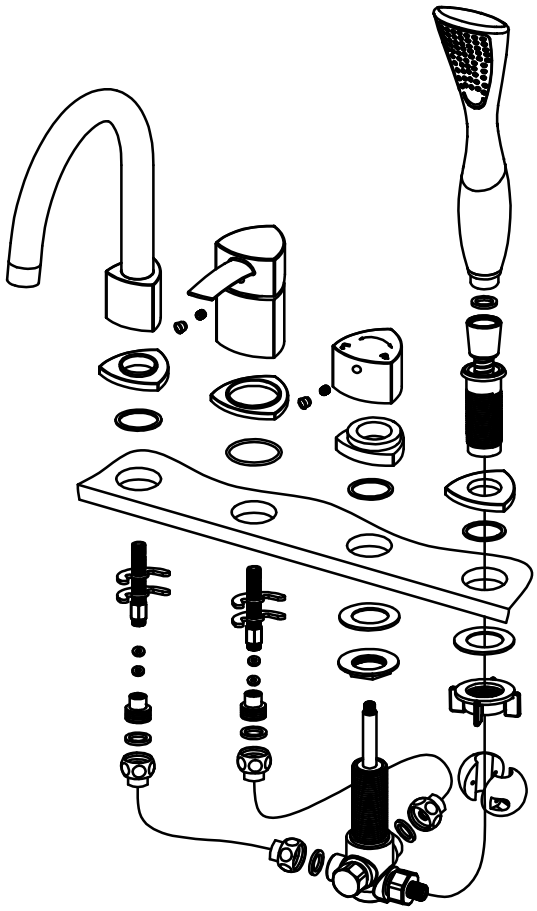

BTM11A